# Vacuum Pad Attachments

## *Large Capacity Rectangular Pad Attachments*

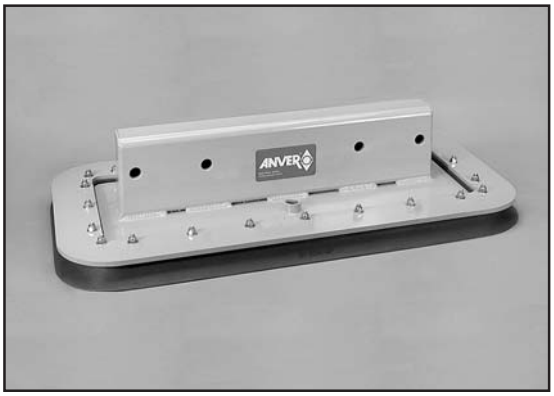

### For Extra Heavy Loads

ANVER Large Capacity Vacuum Pad Attachments are ideal for lifting heavy, compact loads in situations where the available load surface precludes the use of lifters with multiple pads. These larger pads made by ANVER and can be an economical alternative to multiple vacuum pad lifters.

**Features:**
- Sturdy Steel Construction
- Replacement Bolt-On Vacuum Seal
- High Lifting Capacity

**Pad Attachments**

| ANVER Item No. | Dimensions of Pad Attachment in. (mm) | Weight of Pad Attachment lb. (kg) | Headroom Added to Generator (Bottom of Pad to Mounting Holes) in. (mm) | Maximum Lifting Capacity of Vacuum Pad Attachment Based on Vacuum Generator Used: | | | |
|---|---|---|---|---|---|---|---|
| | | | | Capacity with VPF-57HD lb. (kg) | Capacity with M250M lb. (kg) | Capacity with VPE1-H lb. (kg) | Capacity with VPE3-S lb. (kg) |
| PA2129M-S-36 | 29.75 x 21.00 (756 x 533) | 115 (52) | 5 (127) | 2800 (1270) | 2800 (1270) | 2800 (1270) | 2800 (1270) |
| PA1834-S-36 | 19.13 x 35.13 (486 x 892) | 140 (64) | 5 (127) | 3200 (1451) | 3000 (1361) | 3200 (1451) | 3200 (1451) |

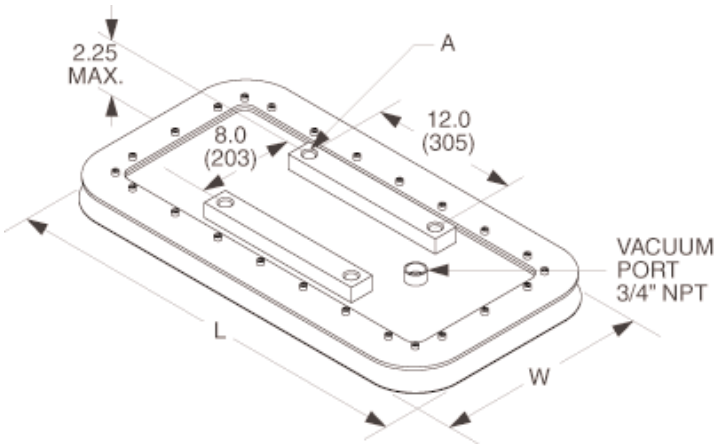


**Single Pads**

| Product Number | Replacement Seal Number | W in. (mm) | L in. (mm) | A Mounting Holes | Weight lb. (kg) | Rated Load* lb. (kg) |
|---|---|---|---|---|---|---|
| VP2129Q | 2129M | 21.00 (533) | 29.75 (756) | 3/4-10 UNC | - | 2800 (1270) |
| VP1834Q | SR-1834-DP | 19.13 (486) | 35.13 (892) | 3/4-10 UNC<br>1-8 UNC | 130 (59) | 3200 (1451) |

➨ This spec sheet was adapted for print from our website. Additional information and photos are available at www.anver.com. 7013801

36 Parmenter Road • Hudson MA 01749 USA • 978-568-0221 • 800-654-3500 • FAX 978-568-1570 • www.anver.com • E-Mail: sales@anver.com